◆DIMENSIONS

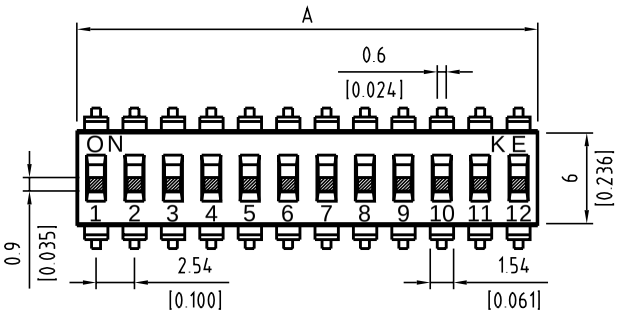

Poles(N)	A (mm)
01	2.54
02	5.08
03	7.62
04	10.16
05	12.70
06	15.24
07	17.78
08	20.32
09	22.86
10	25.40
12	30.48

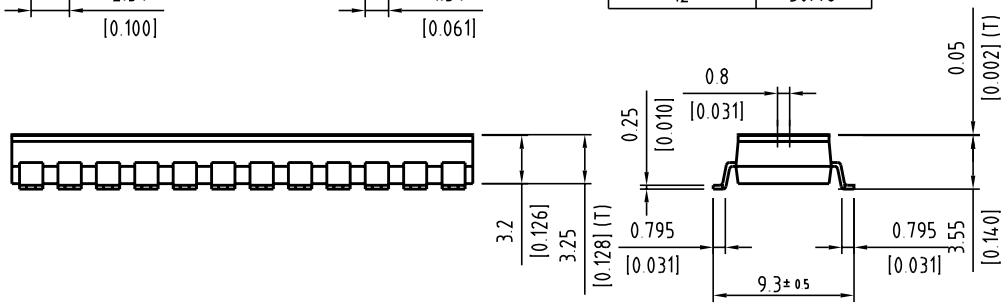

◆SCHEMATIC

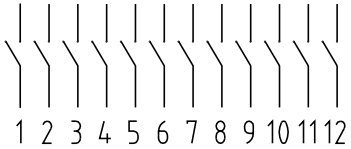

DS IC □□ □ S □ □ □
1 2 3 4 5 6 7 8

◆P.C.B LAYOUT

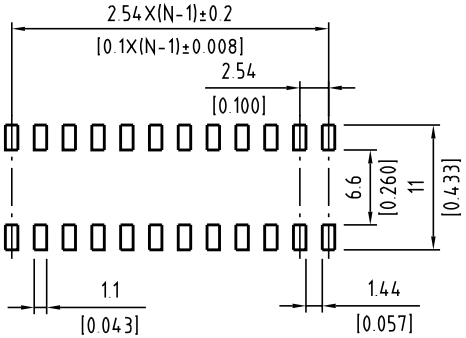

位置	內容	內容	表示
1	Series	DS	DIP Switch
2	Type	IC	IC Type
3	N Poles	01	POP
		02	POP
		03	POP
		04	POP
		05	POP
		06	POP
		07	POP
		08	POP
		09	POP
		10	POP
		12	POP
4	Actuator	S	Low profile W/O Tape
		T	Tape sealed
5	Terminal	S	SMD type
6	Finish	G	Full Gold
		S	Terminal-Tin plated
7	Finish	E	4μ" Gold-plated
		F	10μ" Gold-plated
		A	12μ" Gold-plated
		B	20μ" Gold-plated
		G	30μ" Gold-plated
8	Packing	R	Reel
		T	Tube

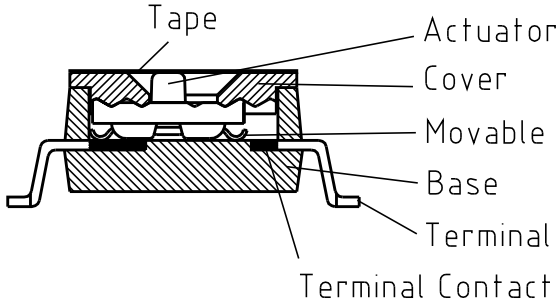

Part Name	Material	Finished
Base	PPS UL94 V0	Black
Cover	PPS UL94 V0	Black
Actuator	Nylon UL94 V0	White
Movable	Copper Alloy	Gold
Terminal Contact	Brass	Gold
Terminal	Brass	Gold / Tin
Tape	Polyimide	Amber

總督電子股份有限公司
KINGTEK ELECTRONICS TECHNOLOGY CORP.

Drawing		Date	03/04/01	Remark:	Product: DSIC Series
Design		Ratio	2:1		P/N: DSIC□□□S□□□
Check		Unit	mm		Drawing No.: DSP-DSICXXTS-AP
Approved					